5 cm

RECORDER TRIGGERING BOX CIRCUIT DIAGRAM

FIGURE No. REPORT 1990/02 AUTHOR: R.J. SEDGMAN

DIVISION OF MINES & MINERAL RESOURCES DRAFTSPERSON: ASM 19/03/90 **5332B**
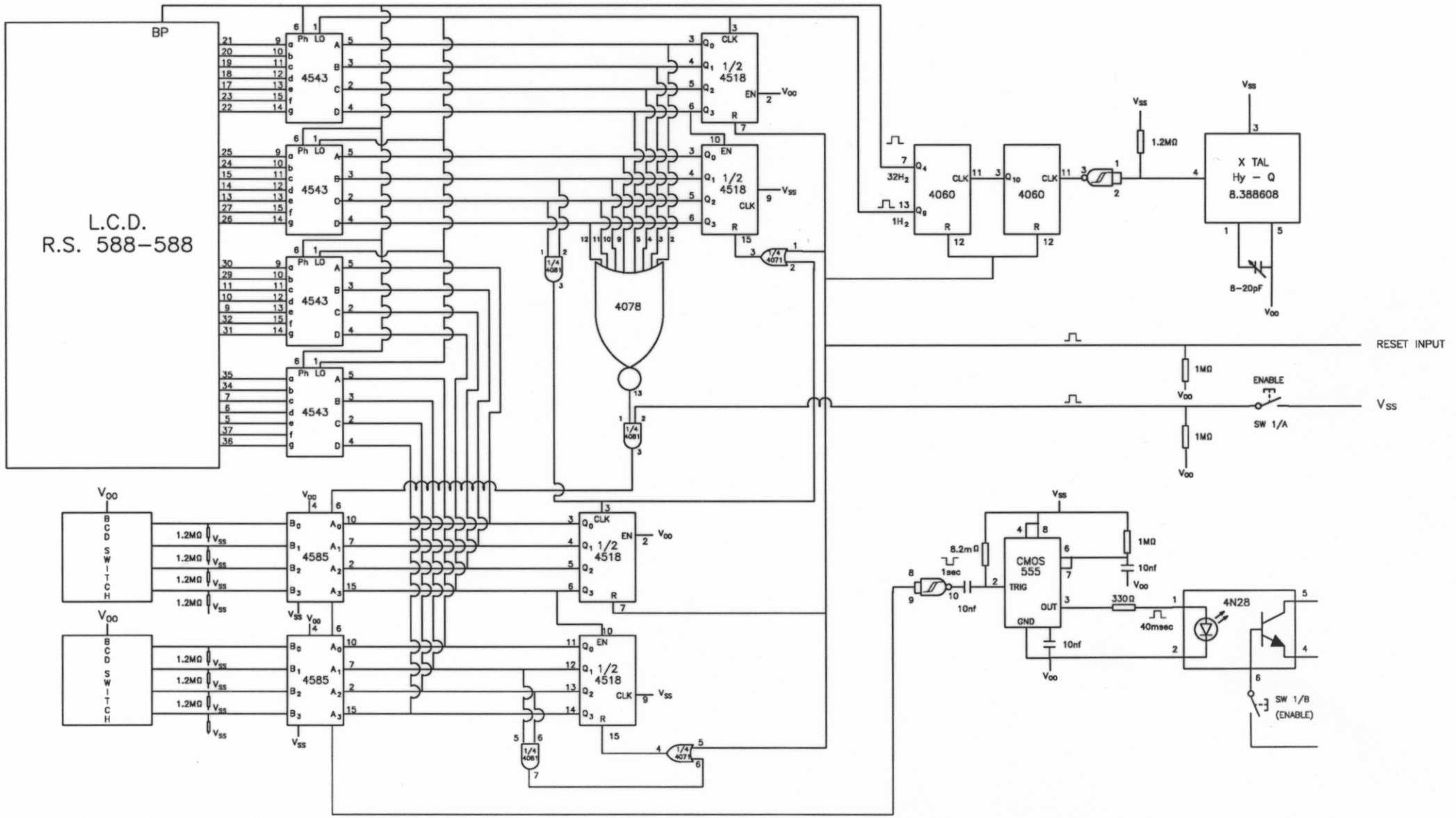
161