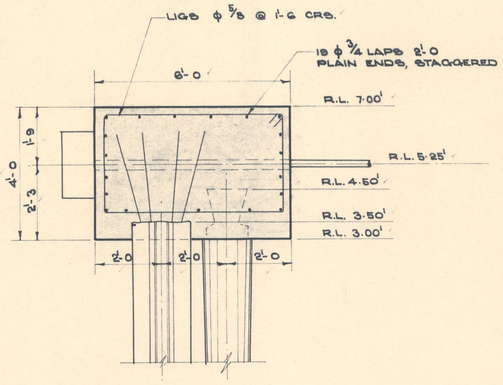


SECTION X-X

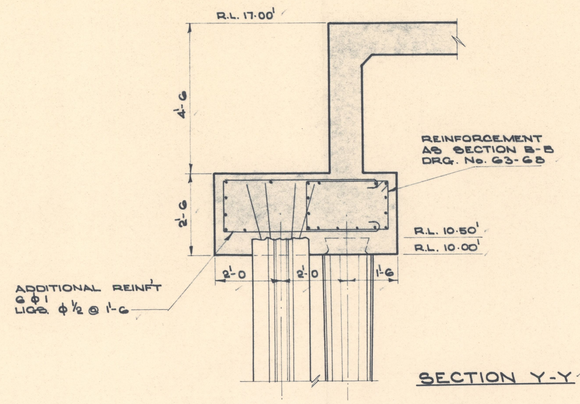


SECTION Y-Y

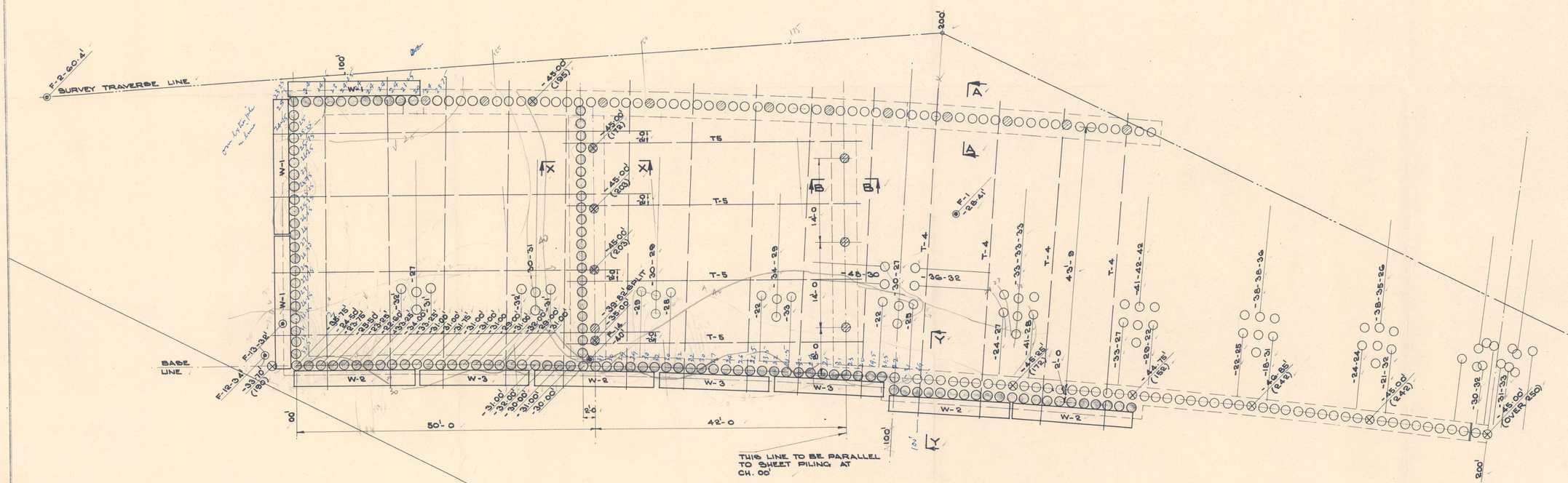


## LEGEND

- ⊙ TEST BORES - REF. L.F.P.B. DRG. No. 1114 (CF8815) & M.B.L 236-40 (CF10633)
- ◉ CONCRETE SHEETPILING
- ○ TIMBER PILING - TOE R.L. SHOWN
- ⊗ TIMBER PILING FOR WHICH ULTIMATE RESISTANCE IS RECORDED. TOE R.L. SHOWN & ULT. RESIST. IN TONS GIVEN IN BRACKETS ( )
- ⊘ TIMBER PILING - TENSION HEADS TRIMMED AS DRG. No. 62-363 SECTION F-F & DRIVEN TO R.L.-45.00'

FOR SECTIONS A-A & B-B & DETAILS OF WALINGS W-1, W-2 & W-3, SEE DRG. Nos. 62-382 & 62-383

TIES T-4 52'-4½" OVERALL LENGTH
" T-5 49'-0" "
" OTHERWISE AS DRG. No. 62-382

5 cm

S. HAUNSTRUP & ASSOCIATES
CONSULTING ENGINEERS
MELBOURNE

LAUNCESTON
FLOOD PROTECTION BOARD
TRAINING LEVEE
ALTERATION CH. 00' TO 200'

| | | |
|---|---|---|
| SCALES: 1/8" = 1'-0 | | DRG. NO. |
| DRAWN J.E. 17-5-63<br>TRACED J.O.K. 28-5-63<br>CHECKED | AMENDED | 63-189 |

THIS DESIGN OR DRAWING IS NOT SOLD BUT LOANED. IT REMAINS THE PROPERTY OF S. HAUNSTRUP & ASSOCIATES, AND IS SUBJECT TO RECALL.

IT MUST NOT BE LENT, COPIED OR REPRODUCED.